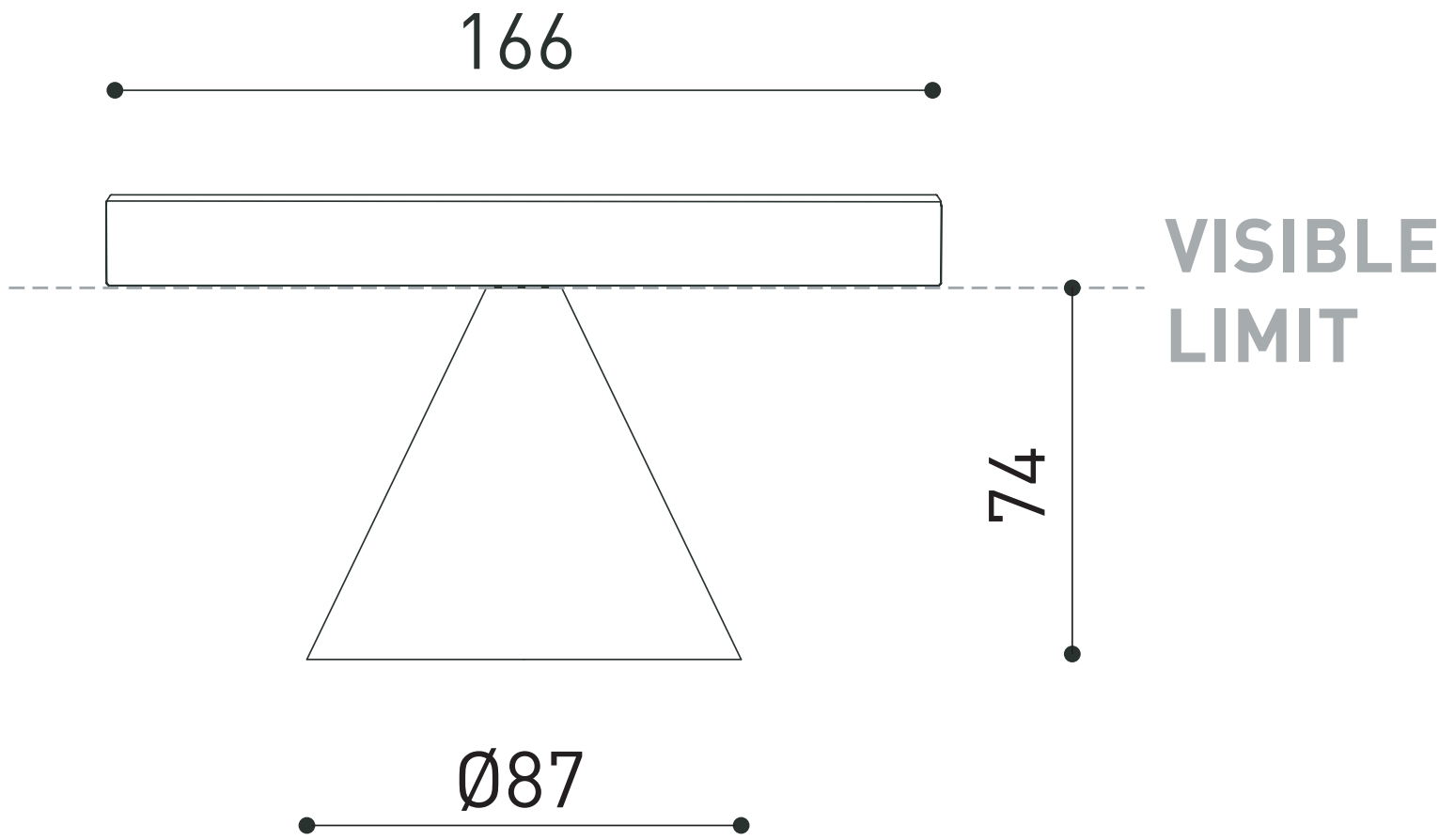
166
VISIBLE
LIMIT
74
Ø87